TOOL SLIDE
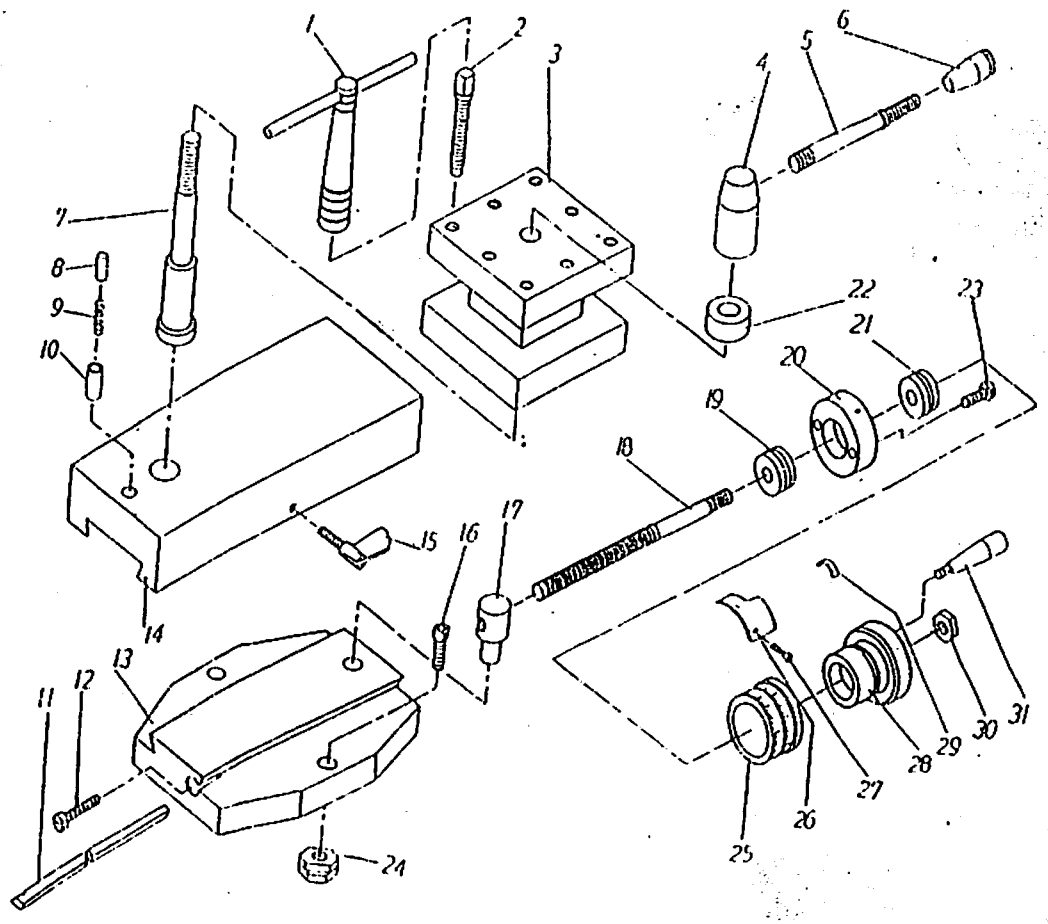
01.Tool post wrench	CF-3068-00
02.Square headed bolt	DF-3064-00
03.4 ways toolpost	DF-3063-00
04.Tool post locking nut	CF-3066-00
05.Hannndle	CF-3067-00
06.Grip	
07.Square turret shaft	CF-3061-00
(T slot)	CF-3061-T0
08.Bushing	DF-3060-00
09.Spring	
10.Bushing	DF-3059-00
11.Taper gib	DF-3056-00
12.Gib adjusting screw	CF-3057-00
13.Swivel	DF-3038-00
14.Compound slide	DF-3055-00
(T slot)	DF-3055-T0
15.Locking screw	CF-3058-00
16.Hex. socket head screw	M8x20
17.Copper screw nut (M)	CF-3042-M0
Copper screw nut (I)	CF-3042-I0
18.Compound slide leadscrew	
(Metric)	DF-3043-M0
(Imperial)	DF-3043-I0
19.Thrust ball bearing	BR-5110-10
20.Compound screw bushing	
(For single dial)	DF-3046-00
(For pual dial)	DF-3047-00
21.Thrust ball bearing	BR-5110-10
22.Spacer	CF-3065-00
23.Hex. socket head screw	M6x20
24.Lock nut for swival	CF-3039-00
25.Compound slide dial	
(For single dial,Inch)	DF-3048-I0
(For single dial,Metric)	DF-3048-M0
(For dual dial,Inch)	DF-3049-I0
(For dual dial,Metric)	DF-3049-M0
26.Dials indicating plate	
(For dual dial,Inch)	DF-3050-I0
(For dual dial,Metric)	DF-3050-M0
27.Round head screw	M4x6
28.Handle wheel	DF-3052-00
29.Feed spring	CF-3035-00
30.Nut	M12
31.Handle knob	DF-3053-00